Deutsches Institut für Bautechnik DIBt

Member of EOTA www.eota.eu

Approval body for construction products and types of construction

Bautechnisches Prüfamt

An institution established by the Federal and Laender Governments

Designated according to Article 29 of Regulation (EU) No 305/2011 and member of EOTA (European Organisation for Technical Assessment)

European Technical Assessment ETA-15/0305 of 19 January 2016

English translation prepared by DIBt - Original version in German language

General Part

Technical Assessment Body issuing the European Technical Assessment:	Deutsches Institut für Bautechnik
Trade name of the construction product	Fröwis Screwed-in anchor Gecko U8
Product family to which the construction product belongs	Screwed-in plastic anchor for fixing of external thermal insulation composite systems with rendering in concrete and masonry
Manufacturer	FROEWIS AKTIENGESELLSCHAFT Gewerbeweg 44 9486 SCHAANWALD FÜRSTENTUM LIECHTENSTEIN
Manufacturing plant	Herstellwerk 1, 2 manufacturing plant 1, 2
This European Technical Assessment contains	15 pages including 3 annexes which form an integral part of this assessment
This European Technical Assessment is issued in accordance with Regulation (EU) No 305/2011, on the basis of	Guideline for European technical approval of "Plastic anchors for fixing of external thermal insulation composite systems with rendering", ETAG 014, edition February 2011, used as European Assessment Document (EAD) according to Article 66 Paragraph 3 of Regulation (EU) No 305/2011.
This version replaces	ETA-15/0305 issued on 9 June 2015

electronic copy of the eta by dibt: eta-15/0305

Deutsches Institut für Bautechnik
Kolonnenstraße 30 B | 10829 Berlin | GERMANY | Phone: +49 30 78730-0 | Fax: +49 30 78730-320 | Email: dibt@dibt.de | www.dibt.de

The European Technical Assessment is issued by the Technical Assessment Body in its official language. Translations of this European Technical Assessment in other languages shall fully correspond to the original issued document and shall be identified as such.

Communication of this European Technical Assessment, including transmission by electronic means, shall be in full. However, partial reproduction may only be made with the written consent of the issuing Technical Assessment Body. Any partial reproduction shall be identified as such.

This European Technical Assessment may be withdrawn by the issuing Technical Assessment Body, in particular pursuant to information by the Commission in accordance with Article 25(3) of Regulation (EU) No 305/2011.

electronic copy of the eta by dibt: eta-15/0305

Specific part

1 Technical description of the product

The Fröwis Screwed-in anchor Gecko U8 consists of an anchor sleeve made of polypropylene and a screw plate in different colours made of polyamide and an accompanying specific screw of galvanised steel.

The product description is given in Annex A.

2 Specification of the intended use in accordance with the applicable European Assessment Document

The performances given in Section 3 are only valid if the anchor is used in compliance with the specifications and conditions given in Annex B.

The verification and assessment methods on which this European Technical Assessment is based lead to the assumption of a working life of the anchor of at least 25 years. The indications given on the working life cannot be interpreted as a guarantee given by the producer, but are to be regarded only as a means for choosing the right products in relation to the expected economically reasonable working life of the works.

3 Performance of the product and references to the methods used for its assessment

3.1 Mechanical resistance and stability (BWR 1)

The essential characteristics regarding mechanical resistance and stability are included under the Basic Works Requirement Safety in use.

3.2 Hygiene, health and the environment (BWR 3)

Regarding dangerous substances there may be requirements (e.g. transposed European legislation and national laws, regulations and administrative provisions) applicable to the products falling within the scope of this European Technical Assessment. In order to meet the provisions of Regulation (EU) No 305/2011, these requirements need also to be complied with, when and where they apply.

3.3 Safety and accessibility in use (BWR 4)

Essential characteristic	Performance
Characteristic resistance	See Annex C 1
Anchor distances and dimensions of members	See Annex B 2
Displacements	See Annex C 2

3.4 Sustainable use of natural resources (BWR 7)

For the sustainable use of natural resources no performance was determined for this product.

4 Assessment and verification of constancy of performance (AVCP) system applied, with reference to its legal base

In accordance with guideline for European technical approval ETAG 014, February 2011 used as European Assessment Document (EAD) according to Article 66 Paragraph 3 of Regulation (EU) No 305/2011 the applicable European legal act is: 97/463/EC.

The system to be applied is: 2+

electronic copy of the eta by dibt: eta-15/0305

5 Technical details necessary for the implementation of the AVCP system, as provided for in the applicable EAD

Technical details necessary for the implementation of the AVCP system are laid down in the control plan deposited with Deutsches Institut für Bautechnik.

Issued in Berlin on 19 January 2016 by Deutsches Institut für Bautechnik

Uwe Bender
Head of Department

b*eglaubigt:*
Ziegler

electronic copy of the eta by dibt: eta-15/0305

Installed condition Fröwis Gecko U8
For OLD RENDER

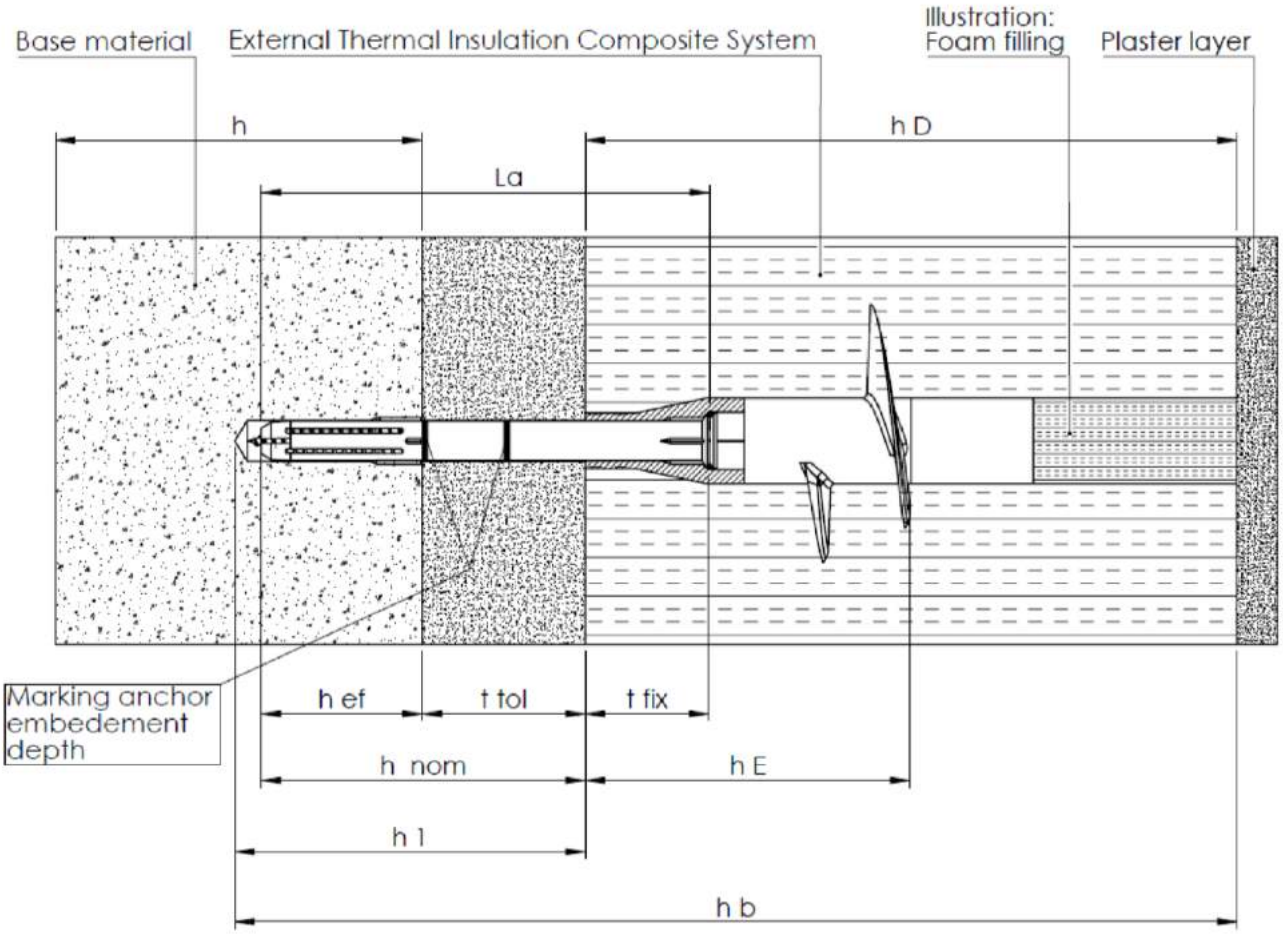

Legend

h_{nom}	=	overall plastic anchor embedment depth in the base material with non-load-bearing layer (t_{tol})
h_{ef}	=	effective anchorage depth
h_1	=	depth of drilled hole to deepest point
h	=	thickness of member (wall)
h_D	=	thickness of insulation material
t_{tol}	=	thickness of equalizing layer and/or non-load-bearing layer
t_{fix}	=	position of screw plate
h_E	=	embedment depth
h_b	=	total borehole depth
$L_{d,\ anchor}$	=	total length of anchor

Fröwis Screwed-in anchor Gecko U8	**Annex A 1**
Product description Installed condition for OLD RENDER	

electronic copy of the eta by dibt: eta-15/0305

Installed condition Fröwis Gecko U8
For NEW BUILDING

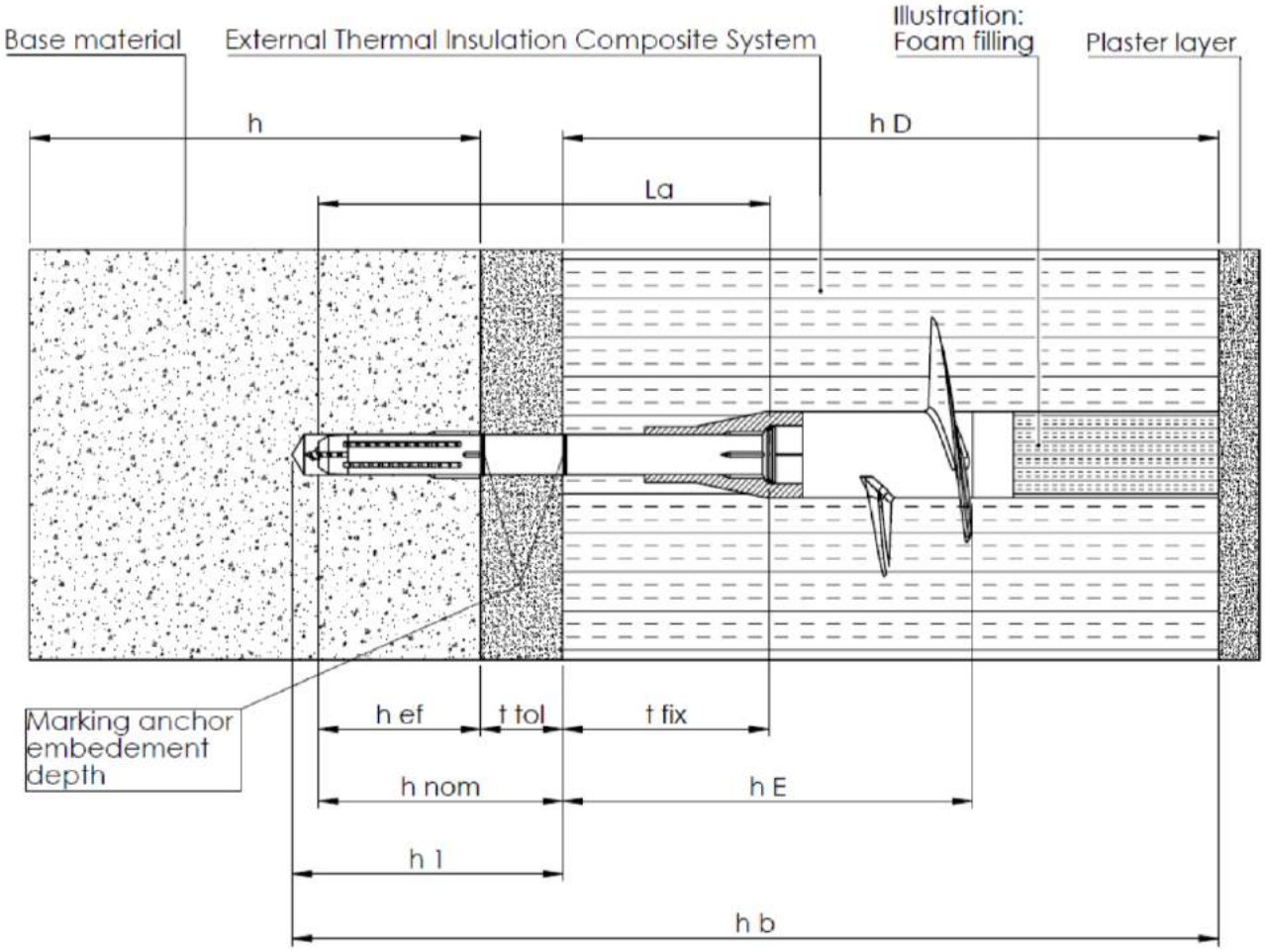

Legend

h_{nom}	=	overall plastic anchor embedment depth in the base material with non-load-bearing layer (t_{tol})
h_{ef}	=	effective anchorage depth
h_1	=	depth of drilled hole to deepest point
h	=	thickness of member (wall)
h_D	=	thickness of insulation material
t_{tol}	=	thickness of equalizing layer and/or non-load-bearing layer
t_{fix}	=	position of screw plate
h_E	=	embedment depth
h_b	=	total borehole depth
L_a	=	total length of anchor

electronic copy of the eta by dibt: eta-15/0305

Fröwis Screwed-in anchor Gecko U8	**Annex A 2**
Product description Installed condition for NEW BUILDING	

Screw plate Gecko U8

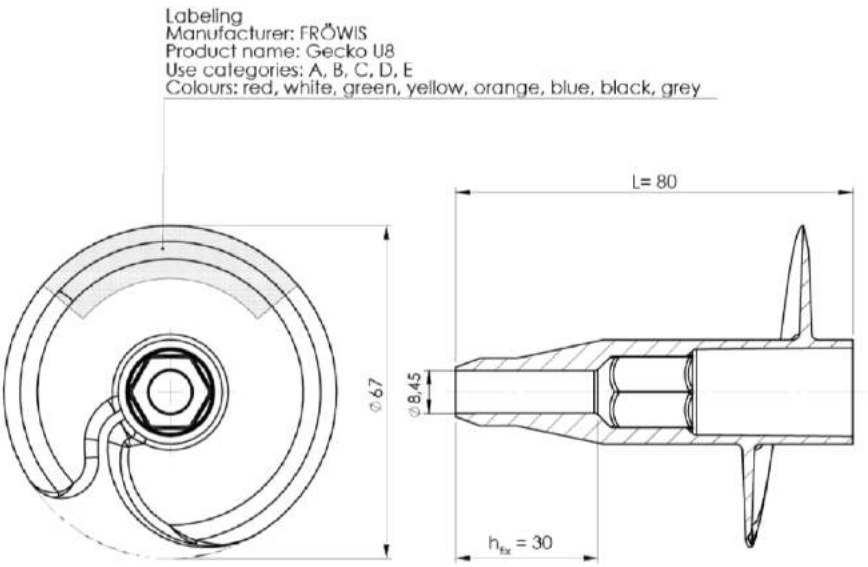

Anchor sleeve TSBD WSG with special screw (ETA-08/0314)

Anchor sleeve TSBD WSG

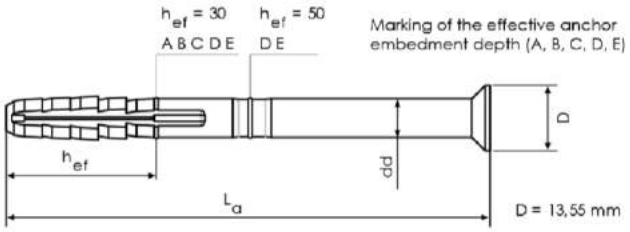

Special screw

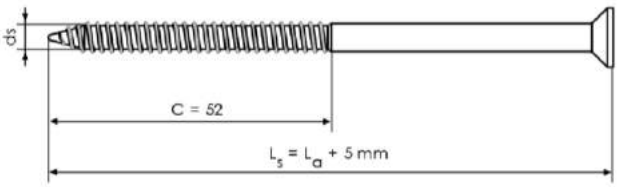

Insulation plug

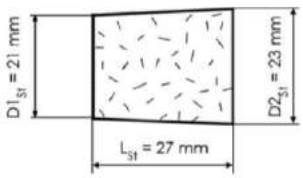

Fröwis Screwed-in anchor Gecko U8	**Annex A 3**
Product description Screw plate, anchor sleeve, special screw, insulation plug Marking	

electronic copy of the eta by dibt: eta-15/0305

Table A1: Dimensions

Anchor type	Anchor sleeve			Special screw		
	d_d [mm]	L_a [mm]	h_{ef} [mm]	d_s [mm]	c [mm]	L_s [mm]
TSBD WSG Use category (A-B-C-D-E)	8	100 - 250	30	5,5	52	L_a + 5mm
TSBD WSG Use category (D-E)	8	100 - 250	50	5,5	52	L_a + 5mm

Anchor type	Screw plate		
	d [mm]	L [mm]	h_{fix} [mm]
Gecko U8 Use category (A-B-C-D-E)	67	80	30

Table A2: Materials

Element	Material
Screw plate	polyamide PA 6.6, colour: red, white, green, yellow, orange, blue, black, grey
Anchor sleeve	polypropylene PP, colour: papyrus white
Special screw	galvanized steel. A2L or A2K according to EN ISO 4042:2001
Insulation plug	polystyrene

Setting tool TX30

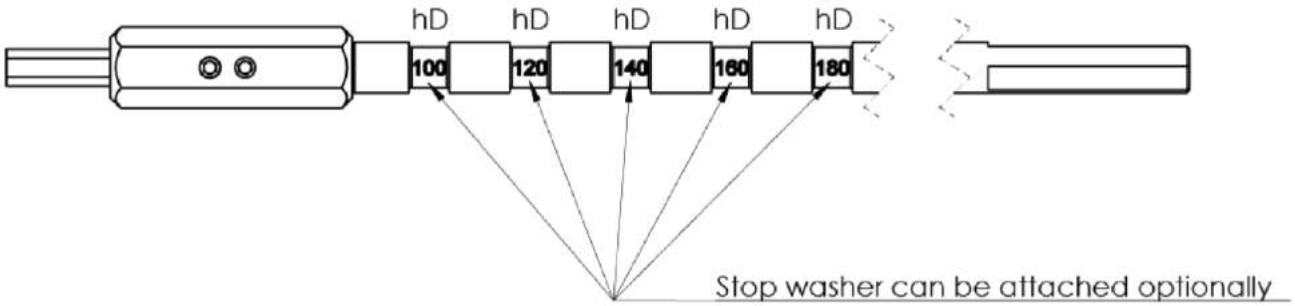

Stop washer

Front Back

Fröwis Screwed-in anchor Gecko U8

Product description
Dimensions, materials, setting tool

Annex A 4

electronic copy of the eta by dibt: eta-15/0305

Specifications of intended use

Anchorages subject to:

- The anchor may only be used for transmission of wind suction loads and shall not be used for the transmission of dead loads of the thermal insulation composite system.

Base materials:

- Normal weight concrete (use category A) according to Annex C 1
- Solid masonry (use category B), according to Annex C 1 and C 3
- Hollow or perforated masonry (use category C), according to Annex C 1 and C 3
- Lightweight aggregate concrete (use category D), according to Annex C 1
- Autoclaved aerated concrete (use category E), according to Annex C 1
- For other base materials of the use categories A, B, C, D or E the characteristic resistance of the anchor may be determined by job site tests according to ETAG 014 Edition February 2011, Annex D.

Temperature Range:

- 0°C to +40°C (max. short term temperature +40°C and max. long term temperature +24°C)

Design:

- The anchorages are designed in accordance with the ETAG 014 Edition February 2011 under the responsibility of an engineer experienced in anchorages and masonry work.
- Verifiable calculation notes and drawings are prepared taking account of the loads to be anchored. The position of the anchor is indicated on the design drawings.
- Fasteners are only to be used for multiple fixings of thermal insulation composite systems.

Installation:

- Hole drilling by the drill modes according to Annex C 1.
- Anchor installation carried out by appropriately qualified personnel and under the supervision of the person responsible for technical matters of the site.
- Installation temperature from 0°C to +40°C
- Exposure to UV due to solar radiation of the anchor not protected by rendering ≤ 6 weeks

electronic copy of the eta by dibt: eta-15/0305

Table B1: Installation parameters for OLD RENDER

Anchor type			TSBD WSG
Use catagories			A-B-C-D-E
Drill hole diameter	d_0 =	[mm]	8
Cutting diameter of drill bit	d_{cut} ≤	[mm]	8,45
Effective anchor embedment depth	h_{ef} =	[mm]	30
Thickness of equalizing layer	t_{tol} ≤	[mm]	40 – 190
Position of screw plate	t_{fix} ≤	[mm]	30
Depth of drilled hole to deepest point [1]	h_1 ≥	[mm]	80 – 230
Required length of anchor [2]	L_a =	[mm]	100 – 250
Thickness of insulation material	h_D =	[mm]	100 – 400
Total borehole depth	h_b =	[mm]	$h_D + h_1$

Table B2: Installation parameters for NEW BUILDING

Anchor type			TSBD WSG	
Use catagories			A-B-C-D-E	D-E
Drill hole diameter	d_0 =	[mm]	8	8
Cutting diameter of drill bit	d_{cut} ≤	[mm]	8,45	8,45
Effective anchorage depth	h_{ef} =	[mm]	30	50
Thickness of equalizing layer	t_{tol} ≤	[mm]	20	
Position of screw plate	t_{fix} ≤	[mm]	50	30
Depth of drilled hole to deepest point [1]	h_1 ≥	[mm]	60	80
Required length of anchor [2]	L_a =	[mm]	100	
Thickness of insulation material	h_D =	[mm]	100 – 400	
Total borehole depth	h_b =	[mm]	$h_D + h_1$	

[1] $h_1 = h_{ef} + t_{tol} + 10$ mm
[2] $L_a = h_{ef} + t_{tol} + t_{fix}$

Table B3: Scheme of distances and spacing

			TSBD WSG
Minimum thickness of the base material	h ≥	[mm]	100
Minimum allowable spacing	s_{min} =	[mm]	100
Minimum allowable edge distance	c_{min} =	[mm]	100

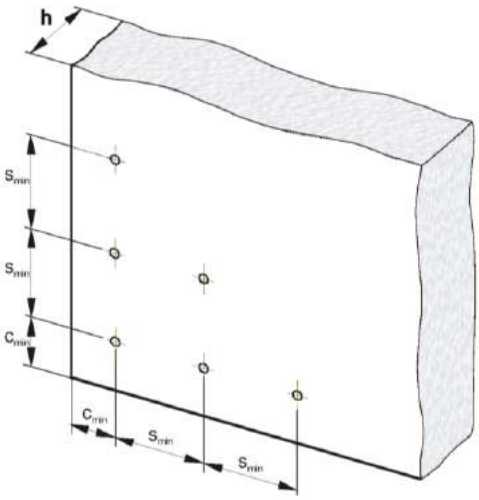

Fröwis Screwed-in anchor Gecko U8

Intended use
Installation parameters
Distances and dimensions of the base material

Annex B 2

electronic copy of the eta by dibt: eta-15/0305

Installation instructions for OLD RENDER

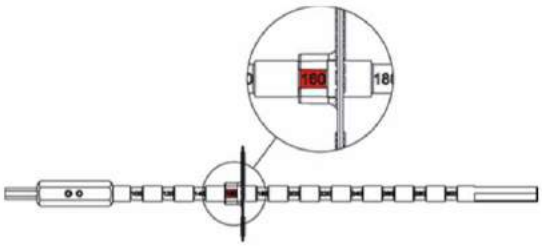

1. Attach stop washer to setting tool

For example with an insulation thickness of 16 cm = 160 mm attach the stop washer at „160“.
Note: Stop washer labeling “OLD RENDER” must face towards the applicator.

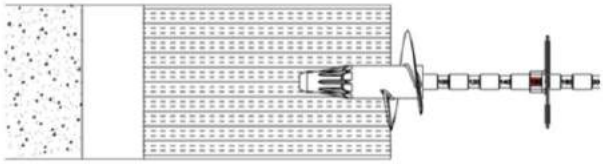

2. Install screw plate

Optionally, pre-drill the insulation panel. Position the Gecko spiral unit on the setting tool and press firmly against the insulation panel.

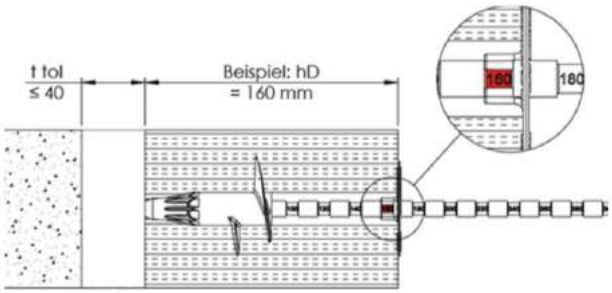

Slowly screw in the spiral unit at a low rotation setting until the stop washer is flush with the insulation board surface.

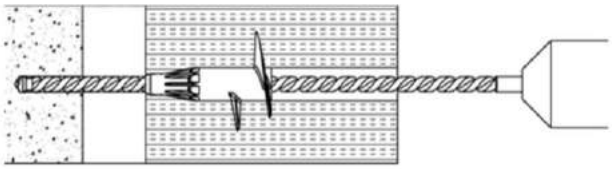

3. Drill hole with the drill bit

Total borehole depth h_b=
thickness of insulation material h_D + 80 mm

Note: Ventilate the drill hole several times.
When drilling in perforated brick and aerated concrete only use rotary drilling without hammer.

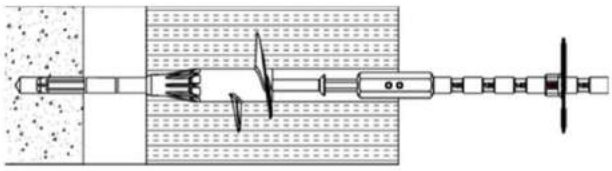

4. Position screw anchor and install

Using the setting tool TX30, position the anchor through the spiral unit beneath the surface until the anchor sleeve stands out in the recess of the spiral unit. Screw the fixing.

Note: If the screw is stripped, a new screw plate must be installed.

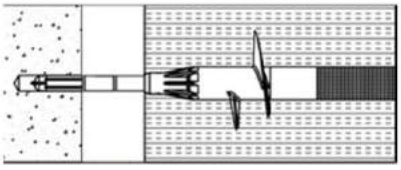

5. Closing the borehole in the insulation

Close the borehole with an insulation plug. Alternatively, fill the borehole with a suitable foam, approved by the system designer.

Fröwis Screwed-in anchor Gecko U8	**Annex B 3**
Intended use Installation instructions for OLD RENDER	

electronic copy of the eta by dibt: eta-15/0305

Installation instructions for NEW BUILDING

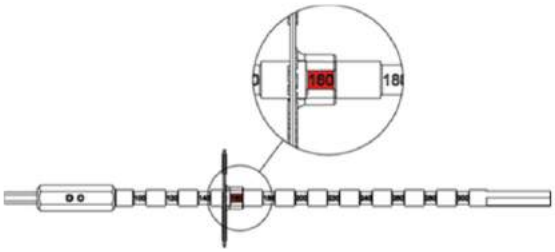

1. Attach stop washer to setting tool

For example with an insulation thickness of 16 cm = 160 mm attach the stop washer at „160“.
Note: Position stop washer labeling “NEW BUILDING” must face towards the applicator.

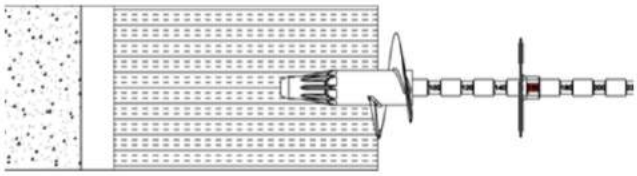

2. Install screw plate

Optionally, pre-drill the insulation panel. Position the Gecko spiral unit on the setting tool and press firmly against the insulation panel.

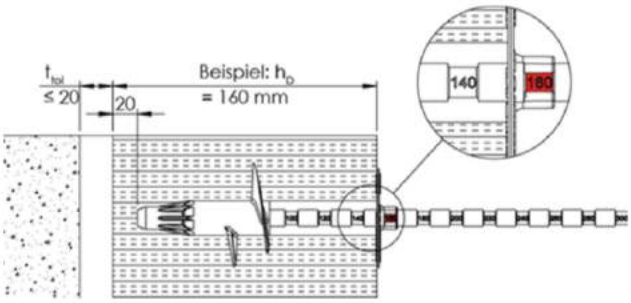

Slowly screw in the spiral unit at a low rotation setting until the stop washer is flush with the insulation board surface.

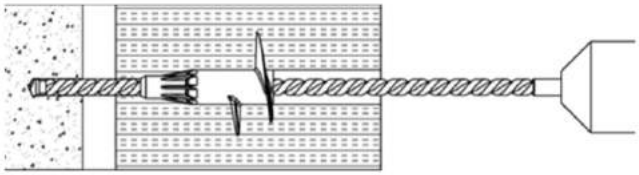

3. Drill hole with the drill bit

Total borehole depth h_b = thickness of insulation material h_D + 60 mm

Note: Ventilate the drill hole several times.
When drilling in perforated brick and aerated concrete only use rotary drilling without hammer.

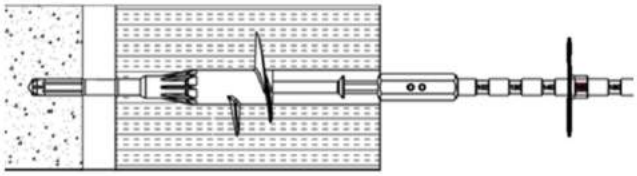

4. Position screw anchor and install

Using the setting tool TX30, position the anchor through the spiral unit beneath the surface until the anchor sleeve stands out in the recess of the spiral unit. Screw the fixing.

Note: If the screw is stripped, a new screw plate must be installed.

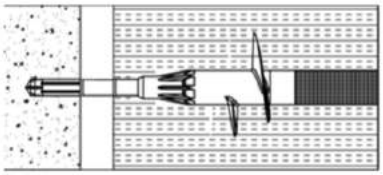

5. Closing the borehole in the insulation

Close the borehole with an insulation plug. Alternatively, fill the borehole with a suitable foam, approved by the system designer.

Fröwis Screwed-in anchor Gecko U8	**Annex B 4**
Intended use Installation instructions for NEW BUILDING	

electronic copy of the eta by dibt: eta-15/0305

Table C1: Characteristic resistance to tension loads N_{Rk} in [kN] for each single anchor

Base material	Bulk density class ρ [kg/dm³]	Minimum compressive strength f_b [N/mm²]	Remarks	Drill method	N_{Rk} [kN]
Concrete C12/15 EN 206-1:2000				Hammer drilling	**1,5**
Concrete C16/20 – C50/60 EN 206-1:2000					**1,5**
Sand-lime solid bricks, KS e.g. acc. to DIN V 106:2005-10 / EN 771-2:2011	≥1.8	12	Vertically perforation up to 15 %		**1,5**
Clay bricks, Mz e.g. acc. to DIN V 105-100:2012-01 / EN 771-1:2011	≥1.7	12	Vertically perforation up to 15 %		**1,5**
Lightweight concrete solid blocks, Vbl 2 e.g. acc. to DIN V 18152-100:2005-10 / EN 771-3:2011	≥0.8	2	According to Annex C 3		**0,75**
Lightweight concrete solid blocks, Vbl 4 e.g. acc. to DIN V 18152-100:2005-10 / EN 771-3:2011	≥0.8	4	According to Annex C 3		**1,2**
Vertically perforated clay bricks, HLz e.g. acc. to DIN 105-100:2012-01 / EN 771-1:2011 outer web thickness ≥ 12 mm	≥1.0	12	Vertically perforation more than 15 % and less than 50 %	Rotary drilling	**0,9**
Vertically perforated sand-lime bricks, KSL e.g. acc. to DIN V 106:2005-10 / EN 771-2:2011 outer web thickness ≥ 20 mm	≥1.4	12	Vertically perforation more than 15 % and less than 50 %		**1,5**
Lightweight concrete hollow blocks, 4K Hbl e.g. acc. to DIN V 18151-100:2005-10 / EN 771-3:2011	≥0.9	2	According to Annex C 3		**0,75**
Lightweight concrete hollow blocks, 1K Hbl e.g. acc. to DIN V 18151-100:2005-10 / EN 771-3:2011	≥0.8	2	According to Annex C 3		**0,9**
Vertically perforated clay bricks Hlz 250x380x235	≥1.0	6	According to Annex C 3		**0,5**
Lightweight aggregate concrete, LAC 4 e.g. acc. to EN 1520:2011-06 / EN 771-3:2011	≥1.0	4	h_{ef} ≥ 30 mm	Hammer drilling	**0,4**
			h_{ef} ≥ 50 mm		**0,9**
Lightweight aggregate concrete , LAC 6 e.g. acc. to EN 1520:2011-06 / EN 771-3:2011	≥1.0	6	h_{ef} ≥ 30 mm		**0,5**
			h_{ef} ≥ 50mm		**1,2**
Autoclaved aerated concrete, PP4-05 e.g. acc. to DIN V 4165-100:2005-10 / EN 771-4:2011	≥0.5	4	h_{ef} ≥ 30mm	Rotary drilling	**0,3**
			h_{ef} ≥ 50mm		**0,75**

Fröwis Screwed-in anchor Gecko U8

Performances
Characteristic resistance of the anchor

Annex C 1

electronic copy of the eta by dibt: eta-15/0305

Table C2: Displacements

Base material	Bulk density class ρ [kg/dm³]	Minimum compressive strength f_b [N/mm²]	Tension load N [kN]	Displacements $\delta_m(N)$ [mm]
Concrete C12/15-C50/60 EN 206-1:2000			0,50	1,6
Sand-lime solid bricks, KS DIN V 106:2005-10 / EN 771-2:2011	≥1.8	12	0,50	1,7
Clay bricks, Mz DIN 105-100:2012-01 / EN 771-1:2011	≥1.7	12	0,50	1,7
Lightweight concrete blocks, Vbl 2 DIN V 18152-100:2005-10 / EN 771-3:2011	≥0.8	2	0,25	1,0
Lightweight concrete block, Vbl 4 DIN V 18152-100:2005-10 / EN 771-3:2011	≥0.8	4	0,40	1,5
Vertically perforated clay brick, HLz DIN 105-100:2012-01 / EN 771-1:2011	≥1.0	12	0,30	1,0
Vertically perforated sand-lime bricks, KSL DIN V 106:2005-10 / EN 771-2:2011	≥1.4	12	0,50	1,7
Lightweight concrete hollow block, 4K Hbl DIN V 18151-100:2005-10 / EN 771-3:2011	≥0.9	2	0,25	0,8
Lightweight concrete hollow block, 1K Hbl DIN V 18151-100:2005-10 / EN 771-3:2011	≥0.8	2	0,30	1,1
Vertically perforated clay bricks Hlz 250x380x235	≥1.0	6	0,15	0,6
Lightweight aggregate concrete, LAC 4 EN 1520:2011-06 / EN 771-3:2011	≥1.0	4	h_{ef} > 30 mm: 0,15	0,5
			h_{ef} ≥ 50 mm: 0,30	1,1
Lightweight aggregate concrete, LAC 6 EN 1520:2011-06 / EN 771-3:2011	≥1.0	6	h_{ef} > 30 mm: 0,15	0,5
			h_{ef} ≥ 50 mm: 0,40	1,3
Autoclaved aerated concrete, PP4-05 DIN V 4165-100:2005-10 / EN 771-4:2011	≥0.5	4	h_{ef} > 30 mm: 0,10	0,5
			h_{ef} ≥ 50 mm: 0,25	0,7

electronic copy of the eta by dibt: eta-15/0305

Table C3: Geometry of Hbl according to DIN V 18151-100:2005-10 / EN 771-3:2011

Geometry	Thickness of brick d [mm]	Outer web in longitudinal direction a [mm]
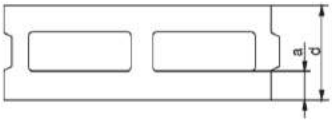	175	50
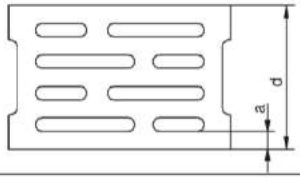	240 300 365	30
The anchor shall be placed in a way the spreading part is anchored in the web of the brick.		

Table C4: Geometry of Vbl according to DIN V 18152-100:2005-10 / EN 771-3:2011

Geometry	Thickness of brick d [mm]	Outer web in longitudinal direction a [mm]
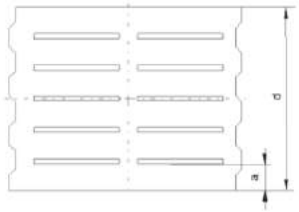	248 300 370	≥ 43

Table C5: Geometry of vertically perforated clay brick Hlz 250x380x235

Geometry	Thickness of brick d [mm]	Outer web in longitudinal direction a [mm]
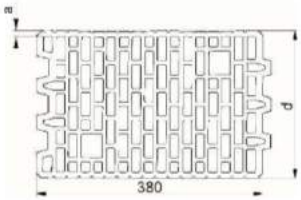	250	≥16

electronic copy of the eta by dibt: eta-15/0305

Fröwis Screwed-in anchor Gecko U8

Performances
Geometry of lightweight concrete hollow blocks and solid lightweight concrete blocks, Hlz 250 x 380 x 235

Annex C 3